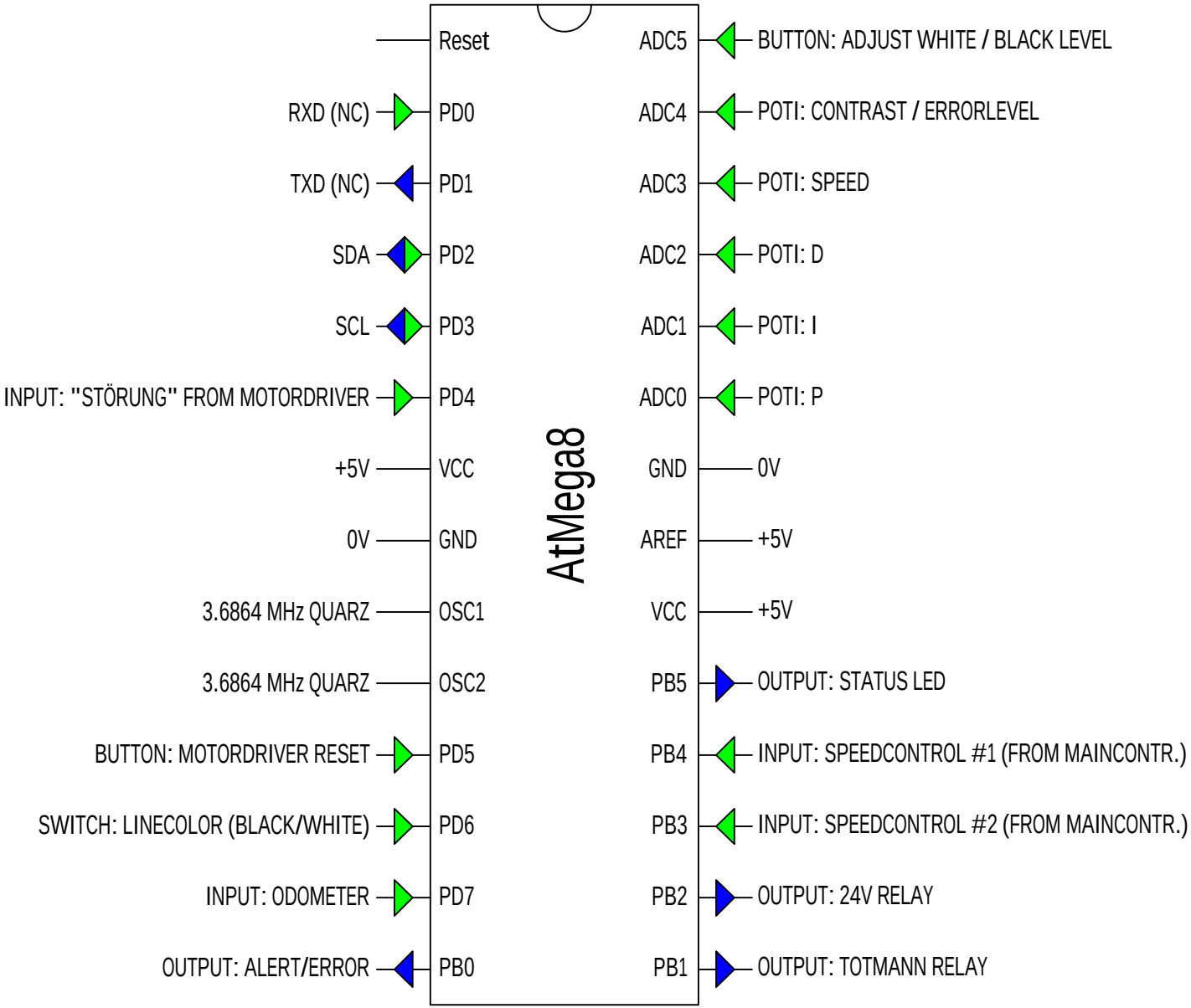Pin I/O drivecontrol